Yokogawa DX Serial Help

© 2011 Kepware Technologies

Table of Contents

Table of Contents ... 2
- Yokogawa DX Serial Help ... 3
- Overview ... 3

Device Setup ... 4
- Modem Setup ... 6

Data Types Description ... 7

Address Descriptions ... 8
- DX102 Addressing ... 8
- DX104 Addressing ... 10
- DX106 Addressing ... 12
- DX112 Addressing ... 13
- DX204 Addressing ... 15
- DX208 Addressing ... 17
- DX210 Addressing ... 19
- DX220 Addressing ... 21
- DX230 Addressing ... 23
- MV100 Addressing ... 24
- MV200 Addressing ... 26

Automatic Tag Database Generation ... 29

Error Descriptions ... 32
- Address Validation ... 32
  - Missing address ... 32
  - Device address '<address>' contains a syntax error ... 32
  - Address '<address>' is out of range for the specified device or register ... 32
  - Data Type '<type>' is not valid for device address '<address>' ... 33
  - Device address '<address>' is Read Only ... 33
- Serial Communications ... 33
  - COMn does not exist ... 33
  - Error opening COMn ... 33
  - COMn is in use by another application ... 33
  - Unable to set comm parameters on COMn ... 34
  - Communications error on '<channel name>' [<error mask>] ... 34
- Device Status Messages ... 34
  - Device '<device name>' is not responding ... 34
  - Unable to write to '<address>' on device '<device name>' ... 35

Index ... 36

Yokogawa DX Serial Help

Help version 1.012

CONTENTS

Overview
What is the Yokogawa DX Serial Driver?

Device Setup
How do I configure a device for use with this driver?

Data Types Description
What data types does this driver support?

Address Descriptions
How do I address a data location on a Yokogawa DX Serial device?

Automatic Tag Database Generation
How can I easily configure tags for the Yokogawa DX Serial driver?

Error Descriptions
What error messages does the Yokogawa DX Serial driver produce?

Overview

The Yokogawa DX Serial Driver provides an easy and reliable way to connect Yokogawa DX Serial devices to OPC Client applications, including HMI, SCADA, Historian, MES, ERP and countless custom applications. It is intended for use with Yokogawa Data Acquisition and Data Recorder devices that support RS232 or RS422 communications.

Device Setup

Supported Yokogawa Devices

DX102
DX104
DX106
DX112
DX204
DX208
DX210
DX220
DX230
MV100
MV200

Supported Communication Parameters

Baud Rate: 300, 600, 1200, 2400, 9600, 19200, or 38400
Parity: None, Even, or Odd
Data Bits: 8
Stop Bits: 1 or 2
Flow Control: None, RTS, or DTR

Note 1: Software handshaking is not available.

Note 2: This driver makes use of binary data formatting when reading information from Yokogawa devices. This requires that a data bit setting of 8 be used.

RS-232 and RS-422/485 Operation

Yokogawa DX Serial devices support can support either RS-232 or RS-422/485 operation. This driver has been designed to support both modes of operation. The mode used depends on the configuration of the OPC Server project.

If intending to connect to a DX device using RS-232, select a Device ID of zero (0). This tells the driver to use the RS-232 mode for communications. If intending to use either RS-422 or RS-485 communications, select a Device ID for each station that is between 1 and 16 for RS-422 and 1 and 31 for RS-485. When using RS-232, only configure one device on the channel.

Request Timeout

This parameter specifies the amount of time that the driver will wait for a response from the device before giving up and going on to the next request. Long timeouts will only affect performance if a device is not responding. The default setting is 1000 milliseconds. The valid range is 100 to 30000 milliseconds.

Retry Attempts

This parameter specifies the number of times that the driver will retry a message before giving up and going on to the next message. The default setting is 3 retries. The valid range is 1 to 10.

Note: For more information, refer to the OPC Servers help documentation.

Device Configuration Parameters

Special Data Handling

The Special Data Handling setting allows the driver to be configured to return specific data values for numerical out of range and error conditions returned from the device. Special Data Handling options are **none**, **+INF**, and **-INF**. If Special Data Handling is set to NONE, special data values will be returned with the actual data value received from the device (for example, the data value of a measuring channel Over Range would be returned as 32,767 and the data value of a math channel Over Range would be returned as 2,147,450,879).

If Special Data Handling is set to +INF, special data values will be returned as a numerical representation of positive infinity (#INF), with the exception of an Under Range condition that is always returned as negative infinity. When Special Data Handling is set to NEG INF, special data values will be returned as a numerical representation of negative infinity (-#INF), with the exception of an Over Range condition that is always returned as positive infinity.

Start math when start

When checked, this option will inform the driver to send a command to the device at communication startup that will start the math computation.

Date & Time
This parameter specifies the origin of the data value of the Date and Time data types which represent the date and time of the latest data. Date & Time options are Device Time and System Time. If Device Time is selected, the Date and Time tags will return the date and time read from the device. This date and time represents the date and time that the latest data was measured or computed based on the internal device clock. If System Time is selected, the Date and Time tags will return the date and time that the requested data was returned from the device based on the PC system clock.

Date Format
This parameter specifies the format of the return string for the Date data type. Date formats can be specified as **MM/DD/YY** (month/day/year), **YY/MM/DD** (year/month/day) or **DD/MM/YY** (day/month/year).

Set clock when start
When checked, this option will inform the driver to send a command to the device at communication startup that will set the device clock to the date and time settings of the system clock.

Cable Diagrams

RS-232 Connections

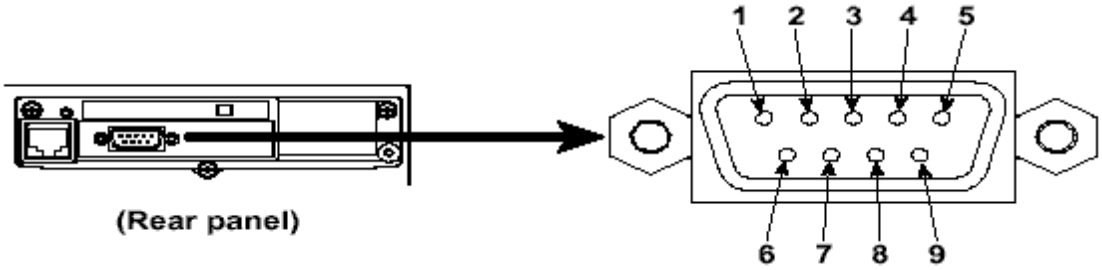

Pin No. Signal Name	Signal Meaning
2 RD (Received Data)	Received data from the PC. Input signal.
3 SD (Send Data)	Send data to the PC. Output signal.
5 SG (Signal Ground)	Signal ground.
7 RS (Request to Send)	Handshaking signal used when receiving data from the PC. Output signal.
8 CS (Clear to Send)	Handshaking signal used when sending data to the PC. Input signal. * Pins 1, 4, 6, and 9 are not used.

RS-422 Connections

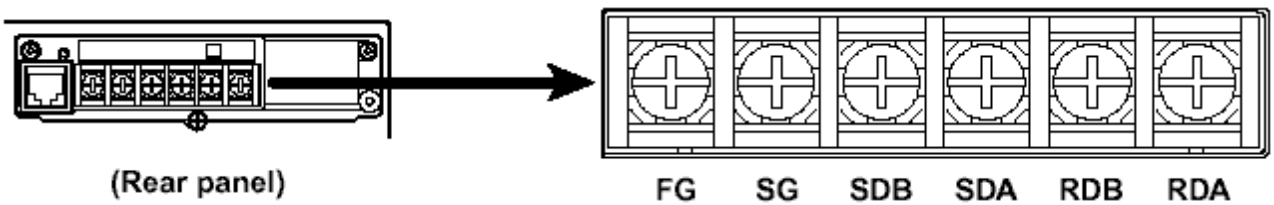

Pin No. Signal Name	Signal Meaning
FG (Frame Ground)	Case ground of the DX.
SG (Signal Ground)	Signal ground.
SDB (Send Data B)	Send data B (+).
SDA (Send Data A)	Send data A (-).
RDB (Received Data B)	Received data B (+).
RDA (Received Data A)	Received data A (-).

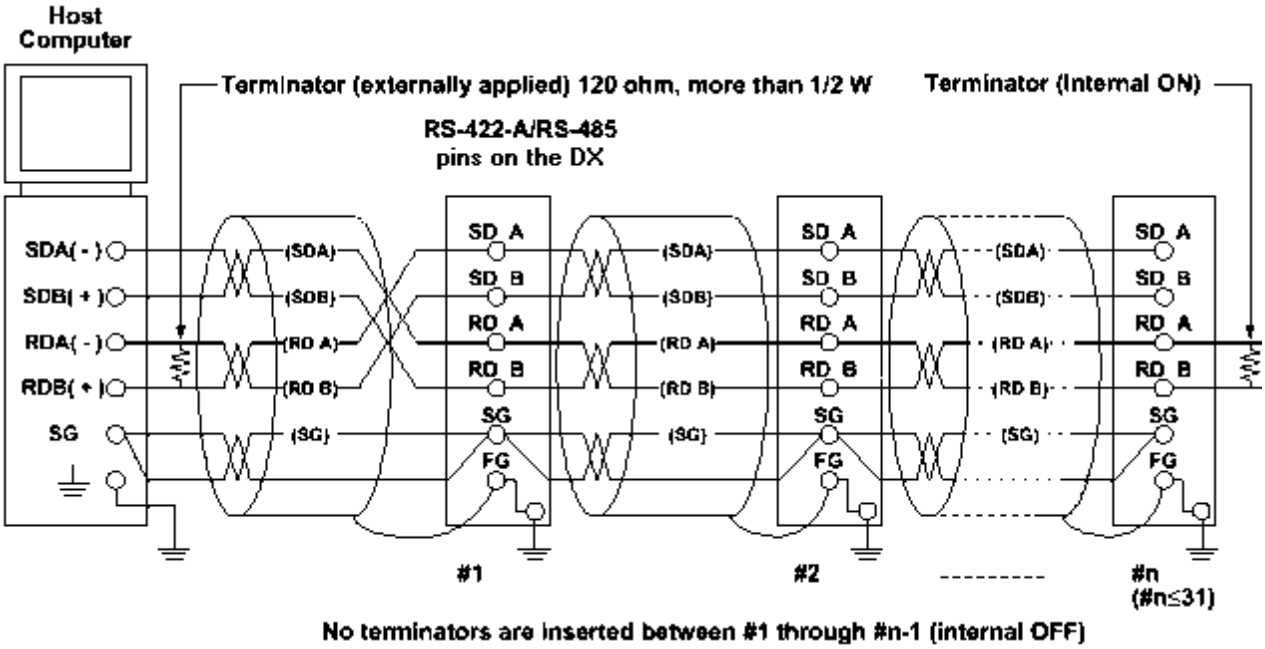

Note: RS-232 and RS-422 configuration is done from the setup menu of the Yokogawa DX recorder.

Modem Setup

This driver supports modem functionality. For more information, please refer to the topic "Modem Support" in the OPC Server Help documentation.

Data Types Description

Data Type	Description
Boolean	Single bit
Byte	Unsigned 8 bit value
Word	Unsigned 16 bit value
Short	Signed 16 bit value
Float	32 bit floating point value
Double	64 bit floating point value
String	Null terminated ASCII string

Address Descriptions

Address specifications vary depending on the model in use. Select a link from the following list to obtain specific address information for the model of interest.

DX102 Addressing
DX104 Addressing
DX106 Addressing
DX112 Addressing
DX204 Addressing
DX208 Addressing
DX210 Addressing
DX220 Addressing
DX230 Addressing
MV100 Addressing
MV200 Addressing

DX102 Addressing

The driver supports the following addresses for this device. The default data type for each address type is shown in **bold**.

Measured Channels

Address Type	Format	Range	Data Type	Access
Process Value of Channel	CHxx or CHxx.PV	01-02	**Double**, Float	Read Only
Alarm Summary of Channel	CHxx.Alarm	01-02	**Short**, Word, Byte	Read Only
Alarm Level1 Status of Channel	CHxx.Alarm1	01-02	**Short**, Word, Byte	Read Only
Alarm Level2 Status of Channel	CHxx.Alarm2	01-02	**Short**, Word, Byte	Read Only
Alarm Level3 Status of Channel	CHxx.Alarm3	01-02	**Short**, Word, Byte	Read Only
Alarm Level4 Status of Channel	CHxx.Alarm4	01-02	**Short**, Word, Byte	Read Only
Set and Read Level1 Alarm Setpoint	CHxx.ASP1	01-02	**Double**, Float	Read/Write
Set and Read Level2 Alarm Setpoint	CHxx.ASP2	01-02	**Double**, Float	Read/Write
Set and Read Level3 Alarm Setpoint	CHxx.ASP3	01-02	**Double**, Float	Read/Write
Set and Read Level4 Alarm Setpoint	CHxx.ASP4	01-02	**Double**, Float	Read/Write
Upper Scale Value of Channel*	CHxx.scale_Hi	01-02	**Double**, Float	Read Only
Lower Scale Value of Channel*	CHxx.scale_Lo	01-02	**Double**, Float	Read Only
Unit String of Channel*	CHxx.unit	01-02	**String**	Read Only
Tagname of Channel*	CHxx.tag	01-02	**String**	Read Only
Status of Channel*	CHxx.status	01-02	**String**	Read Only
Lowest Measuring Channel*	CH.Low		**Short**, Word, Byte	Read Only
Highest Measuring Channel*	CH.High		**Short**, Word, Byte	Read Only

Math Channels

Address Type	Format	Range	Data Type	Access
Process Value of Math Channel	CHxx or CHxx.PV	31-34	**Double**, Float	Read Only
Alarm Summary of Math Channel	CHxx.Alarm	31-34	**Short**, Word, Byte	Read Only
Alarm Level1 Status of Math Channel	CHxx.Alarm1	31-34	**Short**, Word, Byte	Read Only
Alarm Level2 Status of Math Channel	CHxx.Alarm2	31-34	**Short**, Word, Byte	Read Only
Alarm Level3 Status of Math Channel	CHxx.Alarm3	31-34	**Short**, Word, Byte	Read Only
Alarm Level4 Status of Math Channel	CHxx.Alarm4	31-34	**Short**, Word, Byte	Read Only
Set and Read Level1 Alarm Setpoint	CHxx.ASP1	31-34	**Double**, Float	Read/Write
Set and Read Level2 Alarm Setpoint	CHxx.ASP2	31-34	**Double**, Float	Read/Write
Set and Read Level3 Alarm Setpoint	CHxx.ASP3	31-34	**Double**, Float	Read/Write
Set and Read Level4 Alarm Setpoint	CHxx.ASP4	31-34	**Double**, Float	Read/Write
Upper Scale Value of Math Channel*	CHxx.scale_Hi	31-34	**Double**, Float	Read Only
Lower Scale Value of Math Channel*	CHxx.scale_Lo	31-34	**Double**, Float	Read Only
Unit String of Math Channel*	CHxx.unit	01-34	**String**	Read Only
Tagname of Math Channel*	CHxx.tag	01-34	**String**	Read Only

Status of Math Channel*	CHxx.status	01-34	**String**	Read Only
Lowest Math Channel*	CHA.Low		**Short**, Word, Byte	Read Only
Highest Math Channel*	CHA.High		**Short**, Word, Byte	Read Only

Initialized Data
Data associated with the addresses denoted by an (*), are read from the device only at the start of a communications session. Once read, the values will not be refreshed until the server has been restarted or the "Reset" tag has been invoked. To invoke a reset, a non-zero value must be written to the Reset tag. Once the Reset tag has been invoked the driver will reinitialize all startup data from the device.

Alarm Setpoints
Data values for Alarm Setpoints that are undefined in the device will be returned as +INF. Data values can only be written to Alarm Setpoints that are defined in the device. Write operations to undefined Alarm Setpoints will return an error. Write operations are available only for users logged in at the Administrator level and will return an error otherwise. Alarm setpoint values are read one channel at a time. For devices with a large number of channels, increasing the scan rate of ASP items and/or reducing the number of active ASP items will increase the read performance of the PV and alarm data.

Scales
Data values for Scale_Hi and Scale_Lo for channels that are skipped will be returned as +INF.

Tag Names
For devices that do not support tag names and channels that have unspecified tag names, the driver will construct an internal tag name based on the channel number, for example, the tag name of address 'CH01' will be returned as 'CH01'.

General Device Data

Address Type	Format	Range	Data Type	Access
Administrator Level*	Admin		**Boolean**	Read Only
Date of Last Data	Date		**String**	Read Only
Time of Last Data	Time		**String**	Read Only
Model Name of Device*	Model		**String**	Read Only
Math Communication Data*	CDxx	01-04	**Float**	Read/Write
Control Math Execution	MathControl		**Short**, Word, Byte	Write Only
Reset Alarms	AlarmReset		**Boolean**	Write Only
Control Command and Response	Command		**String**	Read/Write
Previous Screen	PreScreen		**Boolean**	Write Only
Direct Reloading of Configuration	Reset		**Boolean**	Write Only

Administrator Level
The Admin address type has a value of '1' or 'true' when the user has logged on at the Administrator level and a value of '0' or 'false' when the user has logged on at the User level.

Math Communication Data
The CD address type is only valid for devices equipped with the math option and write operations to CD addresses for non-math equipped devices will return an error. Write operations are available only for users logged in at the Administrator level and will return an error otherwise. Note that CD addresses are initialized (read) at startup and will not be reread unless the server is restarted or the Reset tag is invoked. For more information, refer to **Note on Initialized Data**.

Model Name of Device
The Model address type will have a string value of 'DX100' or 'DX200', indicating the model series returned by the device.

Control Math Execution
The MathControl address type is only available for devices equipped with the math option and write operations to the MathControl tag for non-math equipped devices will return an error.

Control Command and Response
The Command address allows the user to send a string command and receive a string response to and from the device. This allows the user to send any command to the device, including commands not directly supported by the driver. This tag is only available to users logged in at the Administrator level and write operations will return an error otherwise. Warning: Write operations using the Command address should be performed with extreme caution!

Note 1: The actual number of addresses available for of each type is dependent on the configuration of the Yokogawa device. If at runtime the driver finds that an address is not present in the device, the driver will post an error message and remove the tag from its scan list.

Note 2: Addresses that have Write Only access are assigned a default access of Read/Write. However, data values are unreadable for these addresses and the associated tags are not included in the scan list. The current data value for these tags will always be 0 for numeric data types and null string for string data types.

DX104 Addressing

The driver supports the following addresses for this device. The default data type for each address type is shown in **bold**.

Measured Channels

Address Type	Format	Range	Data Type	Access
Process Value of Channel	CHxx or CHxx.PV	01-04	**Double**, Float	Read Only
Alarm Summary of Channel	CHxx.Alarm	01-04	**Short**, Word, Byte	Read Only
Alarm Level1 Status of Channel	CHxx.Alarm1	01-04	**Short**, Word, Byte	Read Only
Alarm Level2 Status of Channel	CHxx.Alarm2	01-04	**Short**, Word, Byte	Read Only
Alarm Level3 Status of Channel	CHxx.Alarm3	01-04	**Short**, Word, Byte	Read Only
Alarm Level4 Status of Channel	CHxx.Alarm4	01-04	**Short**, Word, Byte	Read Only
Set and Read Level1 Alarm Setpoint	CHxx.ASP1	01-04	**Double**, Float	Read/Write
Set and Read Level2 Alarm Setpoint	CHxx.ASP2	01-04	**Double**, Float	Read/Write
Set and Read Level3 Alarm Setpoint	CHxx.ASP3	01-04	**Double**, Float	Read/Write
Set and Read Level4 Alarm Setpoint	CHxx.ASP4	01-04	**Double**, Float	Read/Write
Upper Scale Value of Channel*	CHxx.scale_Hi	01-04	**Double**, Float	Read Only
Lower Scale Value of Channel*	CHxx.scale_Lo	01-04	**Double**, Float	Read Only
Unit String of Channel*	CHxx.unit	01-04	**String**	Read Only
Tagname of Channel*	CHxx.tag	01-04	**String**	Read Only
Status of Channel*	CHxx.status	01-04	**String**	Read Only
Lowest Measuring Channel*	CH.Low		**Short**, Word, Byte	Read Only
Highest Measuring Channel*	CH.High		**Short**, Word, Byte	Read Only

Math Channels

Address Type	Format	Range	Data Type	Access
Process Value of Math Channel	CHxx or CHxx.PV	31-34	**Double**, Float	Read Only
Alarm Summary of Math Channel	CHxx.Alarm	31-34	**Short**, Word, Byte	Read Only
Alarm Level1 Status of Math Channel	CHxx.Alarm1	31-34	**Short**, Word, Byte	Read Only
Alarm Level2 Status of Math Channel	CHxx.Alarm2	31-34	**Short**, Word, Byte	Read Only
Alarm Level3 Status of Math Channel	CHxx.Alarm3	31-34	**Short**, Word, Byte	Read Only
Alarm Level4 Status of Math Channel	CHxx.Alarm4	31-34	**Short**, Word, Byte	Read Only
Set and Read Level1 Alarm Setpoint	CHxx.ASP1	31-34	**Double**, Float	Read/Write
Set and Read Level2 Alarm Setpoint	CHxx.ASP2	31-34	**Double**, Float	Read/Write
Set and Read Level3 Alarm Setpoint	CHxx.ASP3	31-34	**Double**, Float	Read/Write
Set and Read Level4 Alarm Setpoint	CHxx.ASP4	31-34	**Double**, Float	Read/Write
Upper Scale Value of Math Channel*	CHxx.scale_Hi	31-34	**Double**, Float	Read Only
Lower Scale Value of Math Channel*	CHxx.scale_Lo	31-34	**Double**, Float	Read Only
Unit String of Math Channel*	CHxx.unit	31-34	**String**	Read Only
Tagname of Math Channel*	CHxx.tag	31-34	**String**	Read Only
Status of Math Channel*	CHxx.status	31-34	**String**	Read Only
Lowest Math Channel*	CHA.Low		**Short,** Word, Byte	Read Only
Highest Math Channel*	CHA.High		**Short**, Word, Byte	Read Only

Initialized Data
Data associated with the addresses denoted by an (*), are read from the device only at the start of a communications session. Once read, the values will not be refreshed until the server has been restarted or the "Reset" tag has been invoked. To invoke a reset, a non-zero value must be written to the Reset tag. Once the Reset tag has been invoked the driver will reinitialize all startup data from the device.

Alarm Setpoints

Data values for Alarm Setpoints that are undefined in the device will be returned as +INF. Data values can only be written to Alarm Setpoints that are defined in the device. Write operations to undefined Alarm Setpoints will return an error. Write operations are available only for users logged in at the Administrator level and will return an error otherwise. Alarm setpoint values are read one channel at a time. For devices with a large number of channels, increasing the scan rate of ASP items and/or reducing the number of active ASP items will increase the read performance of the PV and alarm data.

Scales
Data values for Scale_Hi and Scale_Lo for channels that are skipped will be returned as +INF.

Tag Names
For devices that do not support tag names and channels that have unspecified tag names, the driver will construct an internal tag name based on the channel number, for example, the tag name of address 'CH01' will be returned as 'CH01'.

General Device Data

Address Type	Format	Range	Data Type	Access
Administrator Level*	Admin		**Boolean**	Read Only
Date of Last Data	Date		**String**	Read Only
Time of Last Data	Time		**String**	Read Only
Model Name of Device*	Model		**String**	Read Only
Math Communication Data*	CDxx	01-04	**Float**	Read/Write
Control Math Execution	MathControl		**Short**, Word, Byte	Write Only
Reset Alarms	AlarmReset		**Boolean**	Write Only
Control Command and Response	Command		**String**	Read/Write
Previous Screen	PreScreen		**Boolean**	Write Only
Direct Reloading of Configuration	Reset		**Boolean**	Write Only

Administrator Level
The Admin address type has a value of '1' or 'true' when the user has logged on at the Administrator level and a value of '0' or 'false' when the user has logged on at the User level.

Math Communication Data
The CD address type is only valid for devices equipped with the math option and write operations to CD addresses for non-math equipped devices will return an error. Write operations are available only for users logged in at the Administrator level and will return an error otherwise. Note that CD addresses are initialized (read) at startup and will not be reread unless the server is restarted or the Reset tag is invoked. For more information, refer to **Note on Initialized Data**.

Model Name of Device
The Model address type will have a string value of 'DX100' or 'DX200', indicating the model series returned by the device.

Control Math Execution
The MathControl address type is only available for devices equipped with the math option and write operations to the MathControl tag for non-math equipped devices will return an error.

Control Command and Response
The Command address allows the user to send a string command and receive a string response to and from the device. This allows the user to send any command to the device, including commands not directly supported by the driver. This tag is only available to users logged in at the Administrator level and write operations will return an error otherwise. Warning: Write operations using the Command address should be performed with extreme caution!

Note 1: The actual number of addresses available for of each type is dependent on the configuration of the Yokogawa device. If at runtime the driver finds that an address is not present in the device, the driver will post an error message and remove the tag from its scan list.

Note 2: Addresses that have Write Only access are assigned a default access of Read/Write. However, data values are unreadable for these addresses and the associated tags are not included in the scan list. The current data value for these tags will always be 0 for numeric data types and null string for string data types.

DX106 Addressing

The driver supports the following addresses for this device. The default data type for each address type is shown in **bold**.

Measured Channels

Address Type	Format	Range	Data Type	Access
Process Value of Channel	CHxx or CHxx.PV	01-06	**Double**, Float	Read Only
Alarm Summary of Channel	CHxx.Alarm	01-06	**Short**, Word, Byte	Read Only
Alarm Level1 Status of Channel	CHxx.Alarm1	01-06	**Short**, Word, Byte	Read Only
Alarm Level2 Status of Channel	CHxx.Alarm2	01-06	**Short**, Word, Byte	Read Only
Alarm Level3 Status of Channel	CHxx.Alarm3	01-06	**Short**, Word, Byte	Read Only
Alarm Level4 Status of Channel	CHxx.Alarm4	01-06	**Short**, Word, Byte	Read Only
Set and Read Level1 Alarm Setpoint	CHxx.ASP1	01-06	**Double**, Float	Read/Write
Set and Read Level2 Alarm Setpoint	CHxx.ASP2	01-06	**Double**, Float	Read/Write
Set and Read Level3 Alarm Setpoint	CHxx.ASP3	01-06	**Double**, Float	Read/Write
Set and Read Level4 Alarm Setpoint	CHxx.ASP4	01-06	**Double**, Float	Read/Write
Upper Scale Value of Channel*	CHxx.scale_Hi	01-06	**Double**, Float	Read Only
Lower Scale Value of Channel*	CHxx.scale_Lo	01-06	**Double**, Float	Read Only
Unit String of Channel*	CHxx.unit	01-06	**String**	Read Only
Tagname of Channel*	CHxx.tag	01-06	**String**	Read Only
Status of Channel*	CHxx.status	01-06	**String**	Read Only
Lowest Measuring Channel*	CH.Low		**Short**, Word, Byte	Read Only
Highest Measuring Channel*	CH.High		**Short**, Word, Byte	Read Only

Math Channels

Address Type	Format	Range	Data Type	Access
Process Value of Math Channel	CHxx or CHxx.PV	31-42	**Double**, Float	Read Only
Alarm Summary of Math Channel	CHxx.Alarm	31-42	**Short**, Word, Byte	Read Only
Alarm Level1 Status of Math Channel	CHxx.Alarm1	31-42	**Short**, Word, Byte	Read Only
Alarm Level2 Status of Math Channel	CHxx.Alarm2	31-42	**Short**, Word, Byte	Read Only
Alarm Level3 Status of Math Channel	CHxx.Alarm3	31-42	**Short**, Word, Byte	Read Only
Alarm Level4 Status of Math Channel	CHxx.Alarm4	31-42	**Short**, Word, Byte	Read Only
Set and Read Level1 Alarm Setpoint	CHxx.ASP1	31-42	**Double**, Float	Read/Write
Set and Read Level2 Alarm Setpoint	CHxx.ASP2	31-42	**Double**, Float	Read/Write
Set and Read Level3 Alarm Setpoint	CHxx.ASP3	31-42	**Double**, Float	Read/Write
Set and Read Level4 Alarm Setpoint	CHxx.ASP4	31-42	**Double**, Float	Read/Write
Upper Scale Value of Math Channel*	CHxx.scale_Hi	31-42	**Double**, Float	Read Only
Lower Scale Value of Math Channel*	CHxx.scale_Lo	31-42	**Double**, Float	Read Only
Unit String of Math Channel*	CHxx.unit	01-42	**String**	Read Only
Tagname of Math Channel*	CHxx.tag	01-42	**String**	Read Only
Status of Math Channel*	CHxx.status	01-42	**String**	Read Only
Lowest Math Channel*	CHA.Low		**Short,** Word, Byte	Read Only
Highest Math Channel*	CHA.High		**Short**, Word, Byte	Read Only

Initialized Data
Data associated with the addresses denoted by an (*), are read from the device only at the start of a communications session. Once read, the values will not be refreshed until the server has been restarted or the "Reset" tag has been invoked. To invoke a reset, a non-zero value must be written to the Reset tag. Once the Reset tag has been invoked the driver will reinitialize all startup data from the device.

Alarm Setpoints
Data values for Alarm Setpoints that are undefined in the device will be returned as +INF. Data values can only be written to Alarm Setpoints that are defined in the device. Write operations to undefined Alarm Setpoints will return an error. Write operations are available only for users logged in at the Administrator level and will return an error otherwise. Alarm setpoint values are read one channel at a time. For devices with a large number of channels, increasing the scan rate of ASP items and/or reducing the number of active ASP items will increase the read performance of the PV and alarm data.

Scales

Data values for Scale_Hi and Scale_Lo for channels that are skipped will be returned as +INF.

Tag Names
For devices that do not support tag names and channels that have unspecified tag names, the driver will construct an internal tag name based on the channel number, for example, the tag name of address 'CH01' will be returned as 'CH01'.

General Device Data

Address Type	Format	Range	Data Type	Access
Administrator Level*	Admin		**Boolean**	Read Only
Date of Last Data	Date		**String**	Read Only
Time of Last Data	Time		**String**	Read Only
Model Name of Device*	Model		**String**	Read Only
Math Communication Data*	CDxx	01-12	**Float**	Read/Write
Control Math Execution	MathControl		**Short**, Word, Byte	Write Only
Reset Alarms	AlarmReset		**Boolean**	Write Only
Control Command and Response	Command		**String**	Read/Write
Previous Screen	PreScreen		**Boolean**	Write Only
Direct Reloading of Configuration	Reset		**Boolean**	Write Only

Administrator Level
The Admin address type has a value of '1' or 'true' when the user has logged on at the Administrator level and a value of '0' or 'false' when the user has logged on at the User level.

Math Communication Data
The CD address type is only valid for devices equipped with the math option and write operations to CD addresses for non-math equipped devices will return an error. Write operations are available only for users logged in at the Administrator level and will return an error otherwise. Note that CD addresses are initialized (read) at startup and will not be reread unless the server is restarted or the Reset tag is invoked. For more information, refer to **Note on Initialized Data**.

Model Name of Device
The Model address type will have a string value of 'DX100' or 'DX200', indicating the model series returned by the device.

Control Math Execution
The MathControl address type is only available for devices equipped with the math option and write operations to the MathControl tag for non-math equipped devices will return an error.

Control Command and Response
The Command address allows the user to send a string command and receive a string response to and from the device. This allows the user to send any command to the device, including commands not directly supported by the driver. This tag is only available to users logged in at the Administrator level and write operations will return an error otherwise. Warning: Write operations using the Command address should be performed with extreme caution!

Note 1: The actual number of addresses available for of each type is dependent on the configuration of the Yokogawa device. If at runtime the driver finds that an address is not present in the device, the driver will post an error message and remove the tag from its scan list.

Note 2: Addresses that have Write Only access are assigned a default access of Read/Write. However, data values are unreadable for these addresses and the associated tags are not included in the scan list. The current data value for these tags will always be 0 for numeric data types and null string for string data types.

DX112 Addressing

The driver supports the following addresses for this device. The default data type for each address type is shown in **bold**.

Measured Channels

Address Type	Format	Range	Data Type	Access
Process Value of Channel	CHxx or CHxx.PV	01-12	**Double**, Float	Read Only
Alarm Summary of Channel	CHxx.Alarm	01-12	**Short**, Word, Byte	Read Only
Alarm Level1 Status of Channel	CHxx.Alarm1	01-12	**Short**, Word, Byte	Read Only

Alarm Level2 Status of Channel	CHxx.Alarm2	01-12	**Short**, Word, Byte	Read Only
Alarm Level3 Status of Channel	CHxx.Alarm3	01-12	**Short**, Word, Byte	Read Only
Alarm Level4 Status of Channel	CHxx.Alarm4	01-12	**Short**, Word, Byte	Read Only
Set and Read Level1 Alarm Setpoint	CHxx.ASP1	01-12	**Double**, Float	Read/Write
Set and Read Level2 Alarm Setpoint	CHxx.ASP2	01-12	**Double**, Float	Read/Write
Set and Read Level3 Alarm Setpoint	CHxx.ASP3	01-12	**Double**, Float	Read/Write
Set and Read Level4 Alarm Setpoint	CHxx.ASP4	01-12	**Double**, Float	Read/Write
Upper Scale Value of Channel*	CHxx.scale_Hi	01-12	**Double**, Float	Read Only
Lower Scale Value of Channel*	CHxx.scale_Lo	01-12	**Double**, Float	Read Only
Unit String of Channel*	CHxx.unit	01-12	**String**	Read Only
Tagname of Channel*	CHxx.tag	01-12	**String**	Read Only
Status of Channel*	CHxx.status	01-12	**String**	Read Only
Lowest Measuring Channel*	CH.Low		**Short**, Word, Byte	Read Only
Highest Measuring Channel*	CH.High		**Short**, Word, Byte	Read Only

Math Channels

Address Type	Format	Range	Data Type	Access
Process Value of Math Channel	CHxx or CHxx.PV	31-42	**Double**, Float	Read Only
Alarm Summary of Math Channel	CHxx.Alarm	31-42	**Short**, Word, Byte	Read Only
Alarm Level1 Status of Math Channel	CHxx.Alarm1	31-42	**Short**, Word, Byte	Read Only
Alarm Level2 Status of Math Channel	CHxx.Alarm2	31-42	**Short**, Word, Byte	Read Only
Alarm Level3 Status of Math Channel	CHxx.Alarm3	31-42	**Short**, Word, Byte	Read Only
Alarm Level4 Status of Math Channel	CHxx.Alarm4	31-42	**Short**, Word, Byte	Read Only
Set and Read Level1 Alarm Setpoint	CHxx.ASP1	31-42	**Double**, Float	Read/Write
Set and Read Level2 Alarm Setpoint	CHxx.ASP2	31-42	**Double**, Float	Read/Write
Set and Read Level3 Alarm Setpoint	CHxx.ASP3	31-42	**Double**, Float	Read/Write
Set and Read Level4 Alarm Setpoint	CHxx.ASP4	31-42	**Double**, Float	Read/Write
Upper Scale Value of Math Channel*	CHxx.scale_Hi	31-42	**Double**, Float	Read Only
Lower Scale Value of Math Channel*	CHxx.scale_Lo	31-42	**Double**, Float	Read Only
Unit String of Math Channel*	CHxx.unit	01-42	**String**	Read Only
Tagname of Math Channel*	CHxx.tag	01-42	**String**	Read Only
Status of Math Channel*	CHxx.status	01-42	**String**	Read Only
Lowest Math Channel*	CHA.Low		**Short,** Word, Byte	Read Only
Highest Math Channel*	CHA.High		**Short**, Word, Byte	Read Only

Initialized Data
Data associated with the addresses denoted by an (*) are read from the device only at the start of a communications session. Once read, the values will not be refreshed until the server has been restarted or the "Reset" tag has been invoked. To invoke a reset, a non zero value must be written to the Reset tag. Once the Reset tag has been invoked the driver will reinitialize all startup data from the device.

Alarm Setpoints
Data values for Alarm Setpoints that are undefined in the device will be returned as +INF. Data values can only be written to Alarm Setpoints that are defined in the device. Write operations to undefined Alarm Setpoints will return an error. Write operations are available only for users logged in at the Administrator level and will return an error otherwise. Alarm setpoint values are read one channel at a time. For devices with a large number of channels, increasing the scan rate of ASP items and/or reducing the number of active ASP items will increase the read performance of the PV and alarm data.

Scales
Data values for Scale_Hi and Scale_Lo for channels that are skipped will be returned as +INF.

Tag Names
For devices that do not support tag names and channels that have unspecified tag names, the driver will construct an internal tag name based on the channel number, for example, the tag name of address 'CH01' will be returned as 'CH01'.

General Device Data

Address Type	Format	Range	Data Type	Access

Administrator Level*	Admin		**Boolean**	Read Only
Date of Last Data	Date		**String**	Read Only
Time of Last Data	Time		**String**	Read Only
Model Name of Device*	Model		**String**	Read Only
Math Communication Data*	CDxx	01-12	**Float**	Read/Write
Control Math Execution	MathControl		**Short**, Word, Byte	Write Only
Reset Alarms	AlarmReset		**Boolean**	Write Only
Control Command and Response	Command		**String**	Read/Write
Previous Screen	PreScreen		**Boolean**	Write Only
Direct Reloading of Configuration	Reset		**Boolean**	Write Only

Administrator Level
The Admin address type has a value of '1' or 'true' when the user has logged on at the Administrator level and a value of '0' or 'false' when the user has logged on at the User level.

Math Communication Data
The CD address type is only valid for devices equipped with the math option and write operations to CD addresses for non-math equipped devices will return an error. Write operations are available only for users logged in at the Administrator level and will return an error otherwise. Note that CD addresses are initialized (read) at startup and will not be reread unless the server is restarted or the Reset tag is invoked. For more information, refer to **Note on Initialized Data**.

Model Name of Device
The Model address type will have a string value of 'DX100' or 'DX200', indicating the model series returned by the device.

Control Math Execution
The MathControl address type is only available for devices equipped with the math option and write operations to the MathControl tag for non-math equipped devices will return an error.

Control Command and Response
The Command address allows the user to send a string command and receive a string response to and from the device. This allows the user to send any command to the device, including commands not directly supported by the driver. This tag is only available to users logged in at the Administrator level and write operations will return an error otherwise. Warning: Write operations using the Command address should be performed with extreme caution!

Note 1: The actual number of addresses available for of each type is dependent on the configuration of the Yokogawa device. If at runtime the driver finds that an address is not present in the device, the driver will post an error message and remove the tag from its scan list.

Note 2: Addresses that have Write Only access are assigned a default access of Read/Write. However, data values are unreadable for these addresses and the associated tags are not included in the scan list. The current data value for these tags will always be 0 for numeric data types and null string for string data types.

DX204 Addressing

The driver supports the following addresses for this device. The default data type for each address type is shown in **bold**.

Measured Channels

Address Type	Format	Range	Data Type	Access
Process Value of Channel	CHxx or CHxx.PV	01-04	**Double**, Float	Read Only
Alarm Summary of Channel	CHxx.Alarm	01-04	**Short**, Word, Byte	Read Only
Alarm Level1 Status of Channel	CHxx.Alarm1	01-04	**Short**, Word, Byte	Read Only
Alarm Level2 Status of Channel	CHxx.Alarm2	01-04	**Short**, Word, Byte	Read Only
Alarm Level3 Status of Channel	CHxx.Alarm3	01-04	**Short**, Word, Byte	Read Only
Alarm Level4 Status of Channel	CHxx.Alarm4	01-04	**Short**, Word, Byte	Read Only
Set and Read Level1 Alarm Setpoint	CHxx.ASP1	01-04	**Double**, Float	Read/Write
Set and Read Level2 Alarm Setpoint	CHxx.ASP2	01-04	**Double**, Float	Read/Write
Set and Read Level3 Alarm Setpoint	CHxx.ASP3	01-04	**Double**, Float	Read/Write
Set and Read Level4 Alarm Setpoint	CHxx.ASP4	01-04	**Double**, Float	Read/Write
Upper Scale Value of Channel*	CHxx.scale_Hi	01-04	**Double**, Float	Read Only

Lower Scale Value of Channel*	CHxx.scale_Lo	01-04	**Double**, Float	Read Only
Unit String of Channel*	CHxx.unit	01-04	**String**	Read Only
Tagname of Channel*	CHxx.tag	01-04	**String**	Read Only
Status of Channel*	CHxx.status	01-04	**String**	Read Only
Lowest Measuring Channel*	CH.Low		**Short**, Word, Byte	Read Only
Highest Measuring Channel*	CH.High		**Short**, Word, Byte	Read Only

Math Channels

Address Type	Format	Range	Data Type	Access
Process Value of Math Channel	CHxx or CHxx.PV	31-38	**Double**, Float	Read Only
Alarm Summary of Math Channel	CHxx.Alarm	31-38	**Short**, Word, Byte	Read Only
Alarm Level1 Status of Math Channel	CHxx.Alarm1	31-38	**Short**, Word, Byte	Read Only
Alarm Level2 Status of Math Channel	CHxx.Alarm2	31-38	**Short**, Word, Byte	Read Only
Alarm Level3 Status of Math Channel	CHxx.Alarm3	31-38	**Short**, Word, Byte	Read Only
Alarm Level4 Status of Math Channel	CHxx.Alarm4	31-38	**Short**, Word, Byte	Read Only
Set and Read Level1 Alarm Setpoint	CHxx.ASP1	31-38	**Double**, Float	Read/Write
Set and Read Level2 Alarm Setpoint	CHxx.ASP2	31-38	**Double**, Float	Read/Write
Set and Read Level3 Alarm Setpoint	CHxx.ASP3	31-38	**Double**, Float	Read/Write
Set and Read Level4 Alarm Setpoint	CHxx.ASP4	31-38	**Double**, Float	Read/Write
Upper Scale Value of Math Channel*	CHxx.scale_Hi	31-38	**Double**, Float	Read Only
Lower Scale Value of Math Channel*	CHxx.scale_Lo	31-38	**Double**, Float	Read Only
Unit String of Math Channel*	CHxx.unit	01-38	**String**	Read Only
Tagname of Math Channel*	CHxx.tag	01-38	**String**	Read Only
Status of Math Channel*	CHxx.status	01-38	**String**	Read Only
Lowest Math Channel*	CHA.Low		**Short,** Word, Byte	Read Only
Highest Math Channel*	CHA.High		**Short**, Word, Byte	Read Only

Initialized Data
Data associated with the addresses denoted by an (*), are read from the device only at the start of a communications session. Once read, the values will not be refreshed until the server has been restarted or the "Reset" tag has been invoked. To invoke a reset, a non-zero value must be written to the Reset tag. Once the Reset tag has been invoked the driver will reinitialize all startup data from the device.

Alarm Setpoints
Data values for Alarm Setpoints that are undefined in the device will be returned as +INF. Data values can only be written to Alarm Setpoints that are defined in the device. Write operations to undefined Alarm Setpoints will return an error. Write operations are available only for users logged in at the Administrator level and will return an error otherwise. Alarm setpoint values are read one channel at a time. For devices with a large number of channels, increasing the scan rate of ASP items and/or reducing the number of active ASP items will increase the read performance of the PV and alarm data.

Scales
Data values for Scale_Hi and Scale_Lo for channels that are skipped will be returned as +INF.

Tag Names
For devices that do not support tag names and channels that have unspecified tag names, the driver will construct an internal tag name based on the channel number, for example, the tag name of address 'CH01' will be returned as 'CH01'.

General Device Data

Address Type	Format	Range	Data Type	Access
Administrator Level*	Admin		**Boolean**	Read Only
Date of Last Data	Date		**String**	Read Only
Time of Last Data	Time		**String**	Read Only
Model Name of Device*	Model		**String**	Read Only
Math Communication Data*	CDxx	01-08	**Float**	Read/Write
Control Math Execution	MathControl		**Short**, Word, Byte	Write Only
Reset Alarms	AlarmReset		**Boolean**	Write Only
Control Command and Response	Command		**String**	Read/Write

Previous Screen	PreScreen		**Boolean**	Write Only
Direct Reloading of Configuration	Reset		**Boolean**	Write Only

Administrator Level
The Admin address type has a value of '1' or 'true' when the user has logged on at the Administrator level and a value of '0' or 'false' when the user has logged on at the User level.

Math Communication Data
The CD address type is only valid for devices equipped with the math option and write operations to CD addresses for non-math equipped devices will return an error. Write operations are available only for users logged in at the Administrator level and will return an error otherwise. Note that CD addresses are initialized (read) at startup and will not be reread unless the server is restarted or the Reset tag is invoked. For more information, refer to **Note on Initialized Data**.

Model Name of Device
The Model address type will have a string value of 'DX100' or 'DX200', indicating the model series returned by the device.

Control Math Execution
The MathControl address type is only available for devices equipped with the math option and write operations to the MathControl tag for non-math equipped devices will return an error.

Control Command and Response
The Command address allows the user to send a string command and receive a string response to and from the device. This allows the user to send any command to the device, including commands not directly supported by the driver. This tag is only available to users logged in at the Administrator level and write operations will return an error otherwise. Warning: Write operations using the Command address should be performed with extreme caution!

Note 1: The actual number of addresses available for of each type is dependent on the configuration of the Yokogawa device. If at runtime the driver finds that an address is not present in the device, the driver will post an error message and remove the tag from its scan list.

Note 2: Addresses that have Write Only access are assigned a default access of Read/Write. However, data values are unreadable for these addresses and the associated tags are not included in the scan list. The current data value for these tags will always be 0 for numeric data types and null string for string data types.

DX208 Addressing

The driver supports the following addresses for this device. The default data type for each address type is shown in **bold**.

Measured Channels

Address Type	Format	Range	Data Type	Access
Process Value of Channel	CHxx or CHxx.PV	01-08	**Double**, Float	Read Only
Alarm Summary of Channel	CHxx.Alarm	01-08	**Short**, Word, Byte	Read Only
Alarm Level1 Status of Channel	CHxx.Alarm1	01-08	**Short**, Word, Byte	Read Only
Alarm Level2 Status of Channel	CHxx.Alarm2	01-08	**Short**, Word, Byte	Read Only
Alarm Level3 Status of Channel	CHxx.Alarm3	01-08	**Short**, Word, Byte	Read Only
Alarm Level4 Status of Channel	CHxx.Alarm4	01-08	**Short**, Word, Byte	Read Only
Set and Read Level1 Alarm Setpoint	CHxx.ASP1	01-08	**Double**, Float	Read/Write
Set and Read Level2 Alarm Setpoint	CHxx.ASP2	01-08	**Double**, Float	Read/Write
Set and Read Level3 Alarm Setpoint	CHxx.ASP3	01-08	**Double**, Float	Read/Write
Set and Read Level4 Alarm Setpoint	CHxx.ASP4	01-08	**Double**, Float	Read/Write
Upper Scale Value of Channel*	CHxx.scale_Hi	01-08	**Double**, Float	Read Only
Lower Scale Value of Channel*	CHxx.scale_Lo	01-08	**Double**, Float	Read Only
Unit String of Channel*	CHxx.unit	01-08	**String**	Read Only
Tagname of Channel*	CHxx.tag	01-08	**String**	Read Only
Status of Channel*	CHxx.status	01-08	**String**	Read Only
Lowest Measuring Channel*	CH.Low		**Short**, Word, Byte	Read Only
Highest Measuring Channel*	CH.High		**Short**, Word, Byte	Read Only

Math Channels

Address Type	Format	Range	Data Type	Access
Process Value of Math Channel	CHxx or CHxx.PV	31-38	**Double**, Float	Read Only
Alarm Summary of Math Channel	CHxx.Alarm	31-38	**Short**, Word, Byte	Read Only
Alarm Level1 Status of Math Channel	CHxx.Alarm1	31-38	**Short**, Word, Byte	Read Only
Alarm Level2 Status of Math Channel	CHxx.Alarm2	31-38	**Short**, Word, Byte	Read Only
Alarm Level3 Status of Math Channel	CHxx.Alarm3	31-38	**Short**, Word, Byte	Read Only
Alarm Level4 Status of Math Channel	CHxx.Alarm4	31-38	**Short**, Word, Byte	Read Only
Set and Read Level1 Alarm Setpoint	CHxx.ASP1	31-38	**Double**, Float	Read/Write
Set and Read Level2 Alarm Setpoint	CHxx.ASP2	31-38	**Double**, Float	Read/Write
Set and Read Level3 Alarm Setpoint	CHxx.ASP3	31-38	**Double**, Float	Read/Write
Set and Read Level4 Alarm Setpoint	CHxx.ASP4	31-38	**Double**, Float	Read/Write
Upper Scale Value of Math Channel*	CHxx.scale_Hi	31-38	**Double**, Float	Read Only
Lower Scale Value of Math Channel*	CHxx.scale_Lo	31-38	**Double**, Float	Read Only
Unit String of Math Channel*	CHxx.unit	01-38	**String**	Read Only
Tagname of Math Channel*	CHxx.tag	01-38	**String**	Read Only
Status of Math Channel*	CHxx.status	01-38	**String**	Read Only
Lowest Math Channel*	CHA.Low		**Short,** Word, Byte	Read Only
Highest Math Channel*	CHA.High		**Short**, Word, Byte	Read Only

Initialized Data
Data associated with the addresses denoted by an (*), are read from the device only at the start of a communications session. Once read, the values will not be refreshed until the server has been restarted or the "Reset" tag has been invoked. To invoke a reset, a non-zero value must be written to the Reset tag. Once the Reset tag has been invoked the driver will reinitialize all startup data from the device.

Alarm Setpoints
Data values for Alarm Setpoints that are undefined in the device will be returned as +INF. Data values can only be written to Alarm Setpoints that are defined in the device. Write operations to undefined Alarm Setpoints will return an error. Write operations are available only for users logged in at the Administrator level and will return an error otherwise. Alarm setpoint values are read one channel at a time. For devices with a large number of channels, increasing the scan rate of ASP items and/or reducing the number of active ASP items will increase the read performance of the PV and alarm data.

Scales
Data values for Scale_Hi and Scale_Lo for channels that are skipped will be returned as +INF.

Tag Names
For devices that do not support tag names and channels that have unspecified tag names, the driver will construct an internal tag name based on the channel number, for example, the tag name of address 'CH01' will be returned as 'CH01'.

General Device Data

Address Type	Format	Range	Data Type	Access
Administrator Level*	Admin		**Boolean**	Read Only
Date of Last Data	Date		**String**	Read Only
Time of Last Data	Time		**String**	Read Only
Model Name of Device*	Model		**String**	Read Only
Math Communication Data*	CDxx	01-08	**Float**	Read/Write
Control Math Execution	MathControl		**Short**, Word, Byte	Write Only
Reset Alarms	AlarmReset		**Boolean**	Write Only
Control Command and Response	Command		**String**	Read/Write
Previous Screen	PreScreen		**Boolean**	Write Only
Direct Reloading of Configuration	Reset		**Boolean**	Write Only

Administrator Level
The Admin address type has a value of '1' or 'true' when the user has logged on at the Administrator level and a value of '0' or 'false' when the user has logged on at the User level.

Math Communication Data
The CD address type is only valid for devices equipped with the math option and write operations to CD addresses for non-math equipped devices will return an error. Write operations are available only for users logged in at the

Administrator level and will return an error otherwise. Note that CD addresses are initialized (read) at startup and will not be reread unless the server is restarted or the Reset tag is invoked. For more information, refer to **Note on Initialized Data**.

Model Name of Device
The Model address type will have a string value of 'DX100' or 'DX200', indicating the model series returned by the device.

Control Math Execution
The MathControl address type is only available for devices equipped with the math option and write operations to the MathControl tag for non-math equipped devices will return an error.

Control Command and Response
The Command address allows the user to send a string command and receive a string response to and from the device. This allows the user to send any command to the device, including commands not directly supported by the driver. This tag is only available to users logged in at the Administrator level and write operations will return an error otherwise. Warning: Write operations using the Command address should be performed with extreme caution!

Note 1: The actual number of addresses available for of each type is dependent on the configuration of the Yokogawa device. If at runtime the driver finds that an address is not present in the device, the driver will post an error message and remove the tag from its scan list.

Note 2: Addresses that have Write Only access are assigned a default access of Read/Write. However, data values are unreadable for these addresses and the associated tags are not included in the scan list. The current data value for these tags will always be 0 for numeric data types and null string for string data types.

DX210 Addressing

The driver supports the following addresses for this device. The default data type for each address type is shown in **bold**.

Measured Channels

Address Type	Format	Range	Data Type	Access
Process Value of Channel	CHxx or CHxx.PV	01-10	**Double**, Float	Read Only
Alarm Summary of Channel	CHxx.Alarm	01-10	**Short**, Word, Byte	Read Only
Alarm Level1 Status of Channel	CHxx.Alarm1	01-10	**Short**, Word, Byte	Read Only
Alarm Level2 Status of Channel	CHxx.Alarm2	01-10	**Short**, Word, Byte	Read Only
Alarm Level3 Status of Channel	CHxx.Alarm3	01-10	**Short**, Word, Byte	Read Only
Alarm Level4 Status of Channel	CHxx.Alarm4	01-10	**Short**, Word, Byte	Read Only
Set and Read Level1 Alarm Setpoint	CHxx.ASP1	01-10	**Double**, Float	Read/Write
Set and Read Level2 Alarm Setpoint	CHxx.ASP2	01-10	**Double**, Float	Read/Write
Set and Read Level3 Alarm Setpoint	CHxx.ASP3	01-10	**Double**, Float	Read/Write
Set and Read Level4 Alarm Setpoint	CHxx.ASP4	01-10	**Double**, Float	Read/Write
Upper Scale Value of Channel*	CHxx.scale_Hi	01-10	**Double**, Float	Read Only
Lower Scale Value of Channel*	CHxx.scale_Lo	01-10	**Double**, Float	Read Only
Unit String of Channel*	CHxx.unit	01-10	**String**	Read Only
Tagname of Channel*	CHxx.tag	01-10	**String**	Read Only
Status of Channel*	CHxx.status	01-10	**String**	Read Only
Lowest Measuring Channel*	CH.Low		**Short**, Word, Byte	Read Only
Highest Measuring Channel*	CH.High		**Short**, Word, Byte	Read Only

Math Channels

Address Type	Format	Range	Data Type	Access
Process Value of Math Channel	CHxx or CHxx.PV	31-60	**Double**, Float	Read Only
Alarm Summary of Math Channel	CHxx.Alarm	31-60	**Short**, Word, Byte	Read Only
Alarm Level1 Status of Math Channel	CHxx.Alarm1	31-60	**Short**, Word, Byte	Read Only
Alarm Level2 Status of Math Channel	CHxx.Alarm2	31-60	**Short**, Word, Byte	Read Only
Alarm Level3 Status of Math Channel	CHxx.Alarm3	31-60	**Short**, Word, Byte	Read Only
Alarm Level4 Status of Math Channel	CHxx.Alarm4	31-60	**Short**, Word, Byte	Read Only
Set and Read Level1 Alarm Setpoint	CHxx.ASP1	31-60	**Double**, Float	Read/Write
Set and Read Level2 Alarm Setpoint	CHxx.ASP2	31-60	**Double**, Float	Read/Write

Set and Read Level3 Alarm Setpoint	CHxx.ASP3	31-60	**Double**, Float	Read/Write
Set and Read Level4 Alarm Setpoint	CHxx.ASP4	31-60	**Double**, Float	Read/Write
Upper Scale Value of Math Channel*	CHxx.scale_Hi	31-60	**Double**, Float	Read Only
Lower Scale Value of Math Channel*	CHxx.scale_Lo	31-60	**Double**, Float	Read Only
Unit String of Math Channel*	CHxx.unit	01-60	**String**	Read Only
Tagname of Math Channel*	CHxx.tag	01-60	**String**	Read Only
Status of Math Channel*	CHxx.status	01-60	**String**	Read Only
Lowest Math Channel*	CHA.Low		**Short,** Word, Byte	Read Only
Highest Math Channel*	CHA.High		**Short**, Word, Byte	Read Only

Initialized Data
Data associated with the addresses denoted by an (*), are read from the device only at the start of a communications session. Once read, the values will not be refreshed until the server has been restarted or the "Reset" tag has been invoked. To invoke a reset, a non-zero value must be written to the Reset tag. Once the Reset tag has been invoked the driver will reinitialize all startup data from the device.

Alarm Setpoints
Data values for Alarm Setpoints that are undefined in the device will be returned as +INF. Data values can only be written to Alarm Setpoints that are defined in the device. Write operations to undefined Alarm Setpoints will return an error. Write operations are available only for users logged in at the Administrator level and will return an error otherwise. Alarm setpoint values are read one channel at a time. For devices with a large number of channels, increasing the scan rate of ASP items and/or reducing the number of active ASP items will increase the read performance of the PV and alarm data.

Scales
Data values for Scale_Hi and Scale_Lo for channels that are skipped will be returned as +INF.

Tag Names
For devices that do not support tag names and channels that have unspecified tag names, the driver will construct an internal tag name based on the channel number, for example, the tag name of address 'CH01' will be returned as 'CH01'.

General Device Data

Address Type	Format	Range	Data Type	Access
Administrator Level*	Admin		**Boolean**	Read Only
Date of Last Data	Date		**String**	Read Only
Time of Last Data	Time		**String**	Read Only
Model Name of Device*	Model		**String**	Read Only
Math Communication Data*	CDxx	01-30	**Float**	Read/Write
Control Math Execution	MathControl		**Short**, Word, Byte	Write Only
Reset Alarms	AlarmReset		**Boolean**	Write Only
Control Command and Response	Command		**String**	Read/Write
Previous Screen	PreScreen		**Boolean**	Write Only
Direct Reloading of Configuration	Reset		**Boolean**	Write Only

Administrator Level
The Admin address type has a value of '1' or 'true' when the user has logged on at the Administrator level and a value of '0' or 'false' when the user has logged on at the User level.

Math Communication Data
The CD address type is only valid for devices equipped with the math option and write operations to CD addresses for non-math equipped devices will return an error. Write operations are available only for users logged in at the Administrator level and will return an error otherwise. Note that CD addresses are initialized (read) at startup and will not be reread unless the server is restarted or the Reset tag is invoked. For more information, refer to **Note on Initialized Data**.

Model Name of Device
The Model address type will have a string value of 'DX100' or 'DX200', indicating the model series returned by the device.

Control Math Execution
The MathControl address type is only available for devices equipped with the math option and write operations to the MathControl tag for non-math equipped devices will return an error.

Control Command and Response
The Command address allows the user to send a string command and receive a string response to and from the device. This allows the user to send any command to the device, including commands not directly supported by the driver. This tag is only available to users logged in at the Administrator level and write operations will return an error otherwise. Warning: Write operations using the Command address should be performed with extreme caution!

Note 1: The actual number of addresses available for of each type is dependent on the configuration of the Yokogawa device. If at runtime the driver finds that an address is not present in the device, the driver will post an error message and remove the tag from its scan list.

Note 2: Addresses that have Write Only access are assigned a default access of Read/Write. However, data values are unreadable for these addresses and the associated tags are not included in the scan list. The current data value for these tags will always be 0 for numeric data types and null string for string data types.

DX220 Addressing

The driver supports the following addresses for this device. The default data type for each address type is shown in **bold**.

Measured Channels

Address Type	Format	Range	Data Type	Access
Process Value of Channel	CHxx or CHxx.PV	01-20	**Double**, Float	Read Only
Alarm Summary of Channel	CHxx.Alarm	01-20	**Short**, Word, Byte	Read Only
Alarm Level1 Status of Channel	CHxx.Alarm1	01-20	**Short**, Word, Byte	Read Only
Alarm Level2 Status of Channel	CHxx.Alarm2	01-20	**Short**, Word, Byte	Read Only
Alarm Level3 Status of Channel	CHxx.Alarm3	01-20	**Short**, Word, Byte	Read Only
Alarm Level4 Status of Channel	CHxx.Alarm4	01-20	**Short**, Word, Byte	Read Only
Set and Read Level1 Alarm Setpoint	CHxx.ASP1	01-20	**Double**, Float	Read/Write
Set and Read Level2 Alarm Setpoint	CHxx.ASP2	01-20	**Double**, Float	Read/Write
Set and Read Level3 Alarm Setpoint	CHxx.ASP3	01-20	**Double**, Float	Read/Write
Set and Read Level4 Alarm Setpoint	CHxx.ASP4	01-20	**Double**, Float	Read/Write
Upper Scale Value of Channel*	CHxx.scale_Hi	01-20	**Double**, Float	Read Only
Lower Scale Value of Channel*	CHxx.scale_Lo	01-20	**Double**, Float	Read Only
Unit String of Channel*	CHxx.unit	01-20	**String**	Read Only
Tagname of Channel*	CHxx.tag	01-20	**String**	Read Only
Status of Channel*	CHxx.status	01-20	**String**	Read Only
Lowest Measuring Channel*	CH.Low		**Short**, Word, Byte	Read Only
Highest Measuring Channel*	CH.High		**Short**, Word, Byte	Read Only

Math Channels

Address Type	Format	Range	Data Type	Access
Process Value of Math Channel	CHxx or CHxx.PV	31-60	**Double**, Float	Read Only
Alarm Summary of Math Channel	CHxx.Alarm	31-60	**Short**, Word, Byte	Read Only
Alarm Level1 Status of Math Channel	CHxx.Alarm1	31-60	**Short**, Word, Byte	Read Only
Alarm Level2 Status of Math Channel	CHxx.Alarm2	31-60	**Short**, Word, Byte	Read Only
Alarm Level3 Status of Math Channel	CHxx.Alarm3	31-60	**Short**, Word, Byte	Read Only
Alarm Level4 Status of Math Channel	CHxx.Alarm4	31-60	**Short**, Word, Byte	Read Only
Set and Read Level1 Alarm Setpoint	CHxx.ASP1	31-60	**Double**, Float	Read/Write
Set and Read Level2 Alarm Setpoint	CHxx.ASP2	31-60	**Double**, Float	Read/Write
Set and Read Level3 Alarm Setpoint	CHxx.ASP3	31-60	**Double**, Float	Read/Write
Set and Read Level4 Alarm Setpoint	CHxx.ASP4	31-60	**Double**, Float	Read/Write
Upper Scale Value of Math Channel*	CHxx.scale_Hi	31-60	**Double**, Float	Read Only
Lower Scale Value of Math Channel*	CHxx.scale_Lo	31-60	**Double**, Float	Read Only
Unit String of Math Channel*	CHxx.unit	01-60	**String**	Read Only
Tagname of Math Channel*	CHxx.tag	01-60	**String**	Read Only
Status of Math Channel*	CHxx.status	01-60	**String**	Read Only
Lowest Math Channel*	CHA.Low		**Short,** Word, Byte	Read Only
Highest Math Channel*	CHA.High		**Short**, Word, Byte	Read Only

Initialized Data
Data associated with the addresses denoted by an (*), are read from the device only at the start of a communications session. Once read, the values will not be refreshed until the server has been restarted or the "Reset" tag has been invoked. To invoke a reset, a non-zero value must be written to the Reset tag. Once the Reset tag has been invoked the driver will reinitialize all startup data from the device.

Alarm Setpoints
Data values for Alarm Setpoints that are undefined in the device will be returned as +INF. Data values can only be written to Alarm Setpoints that are defined in the device. Write operations to undefined Alarm Setpoints will return an error. Write operations are available only for users logged in at the Administrator level and will return an error otherwise. Alarm setpoint values are read one channel at a time. For devices with a large number of channels, increasing the scan rate of ASP items and/or reducing the number of active ASP items will increase the read performance of the PV and alarm data.

Scales
Data values for Scale_Hi and Scale_Lo for channels that are skipped will be returned as +INF.

Tag Names
For devices that do not support tag names and channels that have unspecified tag names, the driver will construct an internal tag name based on the channel number, for example, the tag name of address 'CH01' will be returned as 'CH01'.

General Device Data

Address Type	Format	Range	Data Type	Access
Administrator Level*	Admin		**Boolean**	Read Only
Date of Last Data	Date		**String**	Read Only
Time of Last Data	Time		**String**	Read Only
Model Name of Device*	Model		**String**	Read Only
Math Communication Data*	CDxx	01-30	**Float**	Read/Write
Control Math Execution	MathControl		**Short**, Word, Byte	Write Only
Reset Alarms	AlarmReset		**Boolean**	Write Only
Control Command and Response	Command		**String**	Read/Write
Previous Screen	PreScreen		**Boolean**	Write Only
Direct Reloading of Configuration	Reset		**Boolean**	Write Only

Administrator Level
The Admin address type has a value of '1' or 'true' when the user has logged on at the Administrator level and a value of '0' or 'false' when the user has logged on at the User level.

Math Communication Data
The CD address type is only valid for devices equipped with the math option and write operations to CD addresses for non-math equipped devices will return an error. Write operations are available only for users logged in at the Administrator level and will return an error otherwise. Note that CD addresses are initialized (read) at startup and will not be reread unless the server is restarted or the Reset tag is invoked. For more information, refer to **Note on Initialized Data**.

Model Name of Device
The Model address type will have a string value of 'DX100' or 'DX200', indicating the model series returned by the device.

Control Math Execution
The MathControl address type is only available for devices equipped with the math option and write operations to the MathControl tag for non-math equipped devices will return an error.

Control Command and Response
The Command address allows the user to send a string command and receive a string response to and from the device. This allows the user to send any command to the device, including commands not directly supported by the driver. This tag is only available to users logged in at the Administrator level and write operations will return an error otherwise. Warning: Write operations using the Command address should be performed with extreme caution!

Note 1: The actual number of addresses available for of each type is dependent on the configuration of the Yokogawa device. If at runtime the driver finds that an address is not present in the device, the driver will post an error message and remove the tag from its scan list.

Note 2: Addresses that have Write Only access are assigned a default access of Read/Write. However, data values are unreadable for these addresses and the associated tags are not included in the scan list. The current data value for these tags will always be 0 for numeric data types and null string for string data types.

DX230 Addressing

The driver supports the following addresses for this device. The default data type for each address type is shown in **bold**.

Measured Channels

Address Type	Format	Range	Data Type	Access
Process Value of Channel	CHxx or CHxx.PV	01-30	**Double**, Float	Read Only
Alarm Summary of Channel	CHxx.Alarm	01-30	**Short**, Word, Byte	Read Only
Alarm Level1 Status of Channel	CHxx.Alarm1	01-30	**Short**, Word, Byte	Read Only
Alarm Level2 Status of Channel	CHxx.Alarm2	01-30	**Short**, Word, Byte	Read Only
Alarm Level3 Status of Channel	CHxx.Alarm3	01-30	**Short**, Word, Byte	Read Only
Alarm Level4 Status of Channel	CHxx.Alarm4	01-30	**Short**, Word, Byte	Read Only
Set and Read Level1 Alarm Setpoint	CHxx.ASP1	01-30	**Double**, Float	Read/Write
Set and Read Level2 Alarm Setpoint	CHxx.ASP2	01-30	**Double**, Float	Read/Write
Set and Read Level3 Alarm Setpoint	CHxx.ASP3	01-30	**Double**, Float	Read/Write
Set and Read Level4 Alarm Setpoint	CHxx.ASP4	01-30	**Double**, Float	Read/Write
Upper Scale Value of Channel*	CHxx.scale_Hi	01-30	**Double**, Float	Read Only
Lower Scale Value of Channel*	CHxx.scale_Lo	01-30	**Double**, Float	Read Only
Unit String of Channel*	CHxx.unit	01-30	**String**	Read Only
Tagname of Channel*	CHxx.tag	01-30	**String**	Read Only
Status of Channel*	CHxx.status	01-30	**String**	Read Only
Lowest Measuring Channel*	CH.Low		**Short**, Word, Byte	Read Only
Highest Measuring Channel*	CH.High		**Short**, Word, Byte	Read Only

Math Channels

Address Type	Format	Range	Data Type	Access
Process Value of Math Channel	CHxx or CHxx.PV	31-60	**Double**, Float	Read Only
Alarm Summary of Math Channel	CHxx.Alarm	31-60	**Short**, Word, Byte	Read Only
Alarm Level1 Status of Math Channel	CHxx.Alarm1	31-60	**Short**, Word, Byte	Read Only
Alarm Level2 Status of Math Channel	CHxx.Alarm2	31-60	**Short**, Word, Byte	Read Only
Alarm Level3 Status of Math Channel	CHxx.Alarm3	31-60	**Short**, Word, Byte	Read Only
Alarm Level4 Status of Math Channel	CHxx.Alarm4	31-60	**Short**, Word, Byte	Read Only
Set and Read Level1 Alarm Setpoint	CHxx.ASP1	31-60	**Double**, Float	Read/Write
Set and Read Level2 Alarm Setpoint	CHxx.ASP2	31-60	**Double**, Float	Read/Write
Set and Read Level3 Alarm Setpoint	CHxx.ASP3	31-60	**Double**, Float	Read/Write
Set and Read Level4 Alarm Setpoint	CHxx.ASP4	31-60	**Double**, Float	Read/Write
Upper Scale Value of Math Channel*	CHxx.scale_Hi	31-60	**Double**, Float	Read Only
Lower Scale Value of Math Channel*	CHxx.scale_Lo	31-60	**Double**, Float	Read Only
Unit String of Math Channel*	CHxx.unit	01-60	**String**	Read Only
Tagname of Math Channel*	CHxx.tag	01-60	**String**	Read Only
Status of Math Channel*	CHxx.status	01-60	**String**	Read Only
Lowest Math Channel*	CHA.Low		**Short,** Word, Byte	Read Only
Highest Math Channel*	CHA.High		**Short**, Word, Byte	Read Only

Initialized Data
Data associated with the addresses denoted by an (*), are read from the device only at the start of a communications session. Once read, the values will not be refreshed until the server has been restarted or the "Reset" tag has been invoked. To invoke a reset, a non-zero value must be written to the Reset tag. Once the Reset tag has been invoked the driver will reinitialize all startup data from the device.

Alarm Setpoints
Data values for Alarm Setpoints that are undefined in the device will be returned as +INF. Data values can only be written to Alarm Setpoints that are defined in the device. Write operations to undefined Alarm Setpoints will return an error. Write operations are available only for users logged in at the Administrator level and will return

an error otherwise. Alarm setpoint values are read one channel at a time. For devices with a large number of channels, increasing the scan rate of ASP items and/or reducing the number of active ASP items will increase the read performance of the PV and alarm data.

Scales
Data values for Scale_Hi and Scale_Lo for channels that are skipped will be returned as +INF.

Tag Names
For devices that do not support tag names and channels that have unspecified tag names, the driver will construct an internal tag name based on the channel number, for example, the tag name of address 'CH01' will be returned as 'CH01'.

General Device Data

Address Type	Format	Range	Data Type	Access
Administrator Level*	Admin		**Boolean**	Read Only
Date of Last Data	Date		**String**	Read Only
Time of Last Data	Time		**String**	Read Only
Model Name of Device*	Model		**String**	Read Only
Math Communication Data*	CDxx	01-30	**Float**	Read/Write
Control Math Execution	MathControl		**Short**, Word, Byte	Write Only
Reset Alarms	AlarmReset		**Boolean**	Write Only
Control Command and Response	Command		**String**	Read/Write
Previous Screen	PreScreen		**Boolean**	Write Only
Direct Reloading of Configuration	Reset		**Boolean**	Write Only

Administrator Level
The Admin address type has a value of '1' or 'true' when the user has logged on at the Administrator level and a value of '0' or 'false' when the user has logged on at the User level.

Math Communication Data
The CD address type is only valid for devices equipped with the math option and write operations to CD addresses for non-math equipped devices will return an error. Write operations are available only for users logged in at the Administrator level and will return an error otherwise. Note that CD addresses are initialized (read) at startup and will not be reread unless the server is restarted or the Reset tag is invoked. For more information, refer to **Note on Initialized Data**.

Model Name of Device
The Model address type will have a string value of 'DX100' or 'DX200', indicating the model series returned by the device.

Control Math Execution
The MathControl address type is only available for devices equipped with the math option and write operations to the MathControl tag for non-math equipped devices will return an error.

Control Command and Response
The Command address allows the user to send a string command and receive a string response to and from the device. This allows the user to send any command to the device, including commands not directly supported by the driver. This tag is only available to users logged in at the Administrator level and write operations will return an error otherwise. Warning: Write operations using the Command address should be performed with extreme caution!

Note 1: The actual number of addresses available for of each type is dependent on the configuration of the Yokogawa device. If at runtime the driver finds that an address is not present in the device, the driver will post an error message and remove the tag from its scan list.

Note 2: Addresses that have Write Only access are assigned a default access of Read/Write. However, data values are unreadable for these addresses and the associated tags are not included in the scan list. The current data value for these tags will always be 0 for numeric data types and null string for string data types.

MV100 Addressing

The driver supports the following addresses for this device. The default data type for each address type is shown in **bold**.

Measured Channels

Address Type	Format	Range	Data Type	Access
Process Value of Channel	CHxx or CHxx.PV	01-12	**Double**, Float	Read Only
Alarm Summary of Channel	CHxx.Alarm	01-12	**Short**, Word, Byte	Read Only
Alarm Level1 Status of Channel	CHxx.Alarm1	01-12	**Short**, Word, Byte	Read Only
Alarm Level2 Status of Channel	CHxx.Alarm2	01-12	**Short**, Word, Byte	Read Only
Alarm Level3 Status of Channel	CHxx.Alarm3	01-12	**Short**, Word, Byte	Read Only
Alarm Level4 Status of Channel	CHxx.Alarm4	01-12	**Short**, Word, Byte	Read Only
Set and Read Level1 Alarm Setpoint	CHxx.ASP1	01-12	**Double**, Float	Read/Write
Set and Read Level2 Alarm Setpoint	CHxx.ASP2	01-12	**Double**, Float	Read/Write
Set and Read Level3 Alarm Setpoint	CHxx.ASP3	01-12	**Double**, Float	Read/Write
Set and Read Level4 Alarm Setpoint	CHxx.ASP4	01-12	**Double**, Float	Read/Write
Upper Scale Value of Channel*	CHxx.scale_Hi	01-12	**Double**, Float	Read Only
Lower Scale Value of Channel*	CHxx.scale_Lo	01-12	**Double**, Float	Read Only
Unit String of Channel*	CHxx.unit	01-12	**String**	Read Only
Tagname of Channel*	CHxx.tag	01-12	**String**	Read Only
Status of Channel*	CHxx.status	01-12	**String**	Read Only
Precision of Channel*	CHxx.Precision	01-12	**Short,** Word, Byte	Read Only
Lowest Measuring Channel*	CH.Low		**Short**, Word, Byte	Read Only
Highest Measuring Channel*	CH.High		**Short**, Word, Byte	Read Only

Math Channels

Address Type	Format	Range	Data Type	Access
Process Value of Math Channel	CHxx or CHxx.PV	31-42	**Double**, Float	Read Only
Alarm Summary of Math Channel	CHxx.Alarm	31-42	**Short**, Word, Byte	Read Only
Alarm Level1 Status of Math Channel	CHxx.Alarm1	31-42	**Short**, Word, Byte	Read Only
Alarm Level2 Status of Math Channel	CHxx.Alarm2	31-42	**Short**, Word, Byte	Read Only
Alarm Level3 Status of Math Channel	CHxx.Alarm3	31-42	**Short**, Word, Byte	Read Only
Alarm Level4 Status of Math Channel	CHxx.Alarm4	31-42	**Short**, Word, Byte	Read Only
Set and Read Level1 Alarm Setpoint	CHxx.ASP1	31-42	**Double**, Float	Read/Write
Set and Read Level2 Alarm Setpoint	CHxx.ASP2	31-42	**Double**, Float	Read/Write
Set and Read Level3 Alarm Setpoint	CHxx.ASP3	31-42	**Double**, Float	Read/Write
Set and Read Level4 Alarm Setpoint	CHxx.ASP4	31-42	**Double**, Float	Read/Write
Upper Scale Value of Math Channel*	CHxx.scale_Hi	31-42	**Double**, Float	Read Only
Lower Scale Value of Math Channel*	CHxx.scale_Lo	31-42	**Double**, Float	Read Only
Unit String of Math Channel*	CHxx.unit	01-42	**String**	Read Only
Tagname of Math Channel*	CHxx.tag	01-42	**String**	Read Only
Status of Math Channel*	CHxx.status	01-42	**String**	Read Only
Precision of Channel*	CHxx.Precision	01-42	**Short,** Word, Byte	Read Only
Lowest Math Channel*	CHA.Low		**Short,** Word, Byte	Read Only
Highest Math Channel*	CHA.High		**Short**, Word, Byte	Read Only

Initialized Data
Data associated with the addresses denoted by an (*), are read from the device only at the start of a communications session. Once read, the values will not be refreshed until the server has been restarted or the "Reset" tag has been invoked. To invoke a reset, a non-zero value must be written to the Reset tag. Once the Reset tag has been invoked the driver will reinitialize all startup data from the device.

Alarm Setpoints
Data values for Alarm Setpoints that are undefined in the device will be returned as +INF. Data values can only be written to Alarm Setpoints that are defined in the device. Write operations to undefined Alarm Setpoints will return an error. Write operations are available only for users logged in at the Administrator level and will return an error otherwise. Alarm setpoint values are read one channel at a time. For devices with a large number of channels, increasing the scan rate of ASP items and/or reducing the number of active ASP items will increase the read performance of the PV and alarm data.

Scales
Data values for Scale_Hi and Scale_Lo for channels that are skipped will be returned as +INF.

Tag Names

For devices that do not support tag names and channels that have unspecified tag names, the driver will construct an internal tag name based on the channel number, for example, the tag name of address 'CH01' will be returned as 'CH01'.

General Device Data

Address Type	Format	Range	Data Type	Access
Administrator Level*	Admin		**Boolean**	Read Only
Date of Last Data	Date		**String**	Read Only
Time of Last Data	Time		**String**	Read Only
Model Name of Device*	Model		**String**	Read Only
Math Communication Data*	CDxx	01-30	**Float**	Read/Write
Control Math Execution	MathControl		**Short**, Word, Byte	Write Only
Reset Alarms	AlarmReset		**Boolean**	Write Only
Control Command and Response	Command		**String**	Read/Write
Previous Screen	PreScreen		**Boolean**	Write Only
Direct Reloading of Configuration	Reset		**Boolean**	Write Only

Administrator Level
The Admin address type has a value of '1' or 'true' when the user has logged on at the Administrator level and a value of '0' or 'false' when the user has logged on at the User level.

Math Communication Data
The CD address type is only valid for devices equipped with the math option and write operations to CD addresses for non-math equipped devices will return an error. Write operations are available only for users logged in at the Administrator level and will return an error otherwise. Note that CD addresses are initialized (read) at startup and will not be reread unless the server is restarted or the Reset tag is invoked. For more information, refer to **Note on Initialized Data**.

Model Name of Device
The Model address type will have a string value of 'DX100' or 'DX200', indicating the model series returned by the device.

Control Math Execution
The MathControl address type is only available for devices equipped with the math option and write operations to the MathControl tag for non-math equipped devices will return an error.

Control Command and Response
The Command address allows the user to send a string command and receive a string response to and from the device. This allows the user to send any command to the device, including commands not directly supported by the driver. This tag is only available to users logged in at the Administrator level and write operations will return an error otherwise. Warning: Write operations using the Command address should be performed with extreme caution!

Note 1: The actual number of addresses available for of each type is dependent on the configuration of the Yokogawa device. If at runtime the driver finds that an address is not present in the device, the driver will post an error message and remove the tag from its scan list.

Note 2: Addresses that have Write Only access are assigned a default access of Read/Write. However, data values are unreadable for these addresses and the associated tags are not included in the scan list. The current data value for these tags will always be 0 for numeric data types and null string for string data types.

MV200 Addressing

The driver supports the following addresses for this device. The default data type for each address type is shown in **bold**.

Measured Channels

Address Type	Format	Range	Data Type	Access
Process Value of Channel	CHxx or CHxx.PV	01-30	**Double**, Float	Read Only
Alarm Summary of Channel	CHxx.Alarm	01-30	**Short**, Word, Byte	Read Only
Alarm Level1 Status of Channel	CHxx.Alarm1	01-30	**Short**, Word, Byte	Read Only
Alarm Level2 Status of Channel	CHxx.Alarm2	01-30	**Short**, Word, Byte	Read Only
Alarm Level3 Status of Channel	CHxx.Alarm3	01-30	**Short**, Word, Byte	Read Only
Alarm Level4 Status of Channel	CHxx.Alarm4	01-30	**Short**, Word, Byte	Read Only

Set and Read Level1 Alarm Setpoint	CHxx.ASP1	01-30	**Double**, Float	Read/Write
Set and Read Level2 Alarm Setpoint	CHxx.ASP2	01-30	**Double**, Float	Read/Write
Set and Read Level3 Alarm Setpoint	CHxx.ASP3	01-30	**Double**, Float	Read/Write
Set and Read Level4 Alarm Setpoint	CHxx.ASP4	01-30	**Double**, Float	Read/Write
Upper Scale Value of Channel*	CHxx.scale_Hi	01-30	**Double**, Float	Read Only
Lower Scale Value of Channel*	CHxx.scale_Lo	01-30	**Double**, Float	Read Only
Unit String of Channel*	CHxx.unit	01-30	**String**	Read Only
Tagname of Channel*	CHxx.tag	01-30	**String**	Read Only
Status of Channel*	CHxx.status	01-30	**String**	Read Only
Precision of Channel*	CHxx.Precision	01-30	**Short,** Word, Byte	Read Only
Lowest Measuring Channel*	CH.Low		**Short**, Word, Byte	Read Only
Highest Measuring Channel*	CH.High		**Short**, Word, Byte	Read Only

Math Channels

Address Type	Format	Range	Data Type	Access
Process Value of Math Channel	CHxx or CHxx.PV	31-60	**Double**, Float	Read Only
Alarm Summary of Math Channel	CHxx.Alarm	31-60	**Short**, Word, Byte	Read Only
Alarm Level1 Status of Math Channel	CHxx.Alarm1	31-60	**Short**, Word, Byte	Read Only
Alarm Level2 Status of Math Channel	CHxx.Alarm2	31-60	**Short**, Word, Byte	Read Only
Alarm Level3 Status of Math Channel	CHxx.Alarm3	31-60	**Short**, Word, Byte	Read Only
Alarm Level4 Status of Math Channel	CHxx.Alarm4	31-60	**Short**, Word, Byte	Read Only
Set and Read Level1 Alarm Setpoint	CHxx.ASP1	31-60	**Double**, Float	Read/Write
Set and Read Level2 Alarm Setpoint	CHxx.ASP2	31-60	**Double**, Float	Read/Write
Set and Read Level3 Alarm Setpoint	CHxx.ASP3	31-60	**Double**, Float	Read/Write
Set and Read Level4 Alarm Setpoint	CHxx.ASP4	31-60	**Double**, Float	Read/Write
Upper Scale Value of Math Channel*	CHxx.scale_Hi	31-60	**Double**, Float	Read Only
Lower Scale Value of Math Channel*	CHxx.scale_Lo	31-60	**Double**, Float	Read Only
Unit String of Math Channel*	CHxx.unit	01-60	**String**	Read Only
Tagname of Math Channel*	CHxx.tag	01-60	**String**	Read Only
Status of Math Channel*	CHxx.status	01-60	**String**	Read Only
Precision of Channel*	CHxx.Precision	01-60	**Short,** Word, Byte	Read Only
Lowest Math Channel*	CHA.Low		**Short,** Word, Byte	Read Only
Highest Math Channel*	CHA.High		**Short**, Word, Byte	Read Only

Initialized Data
Data associated with the addresses denoted by an (*), are read from the device only at the start of a communications session. Once read, the values will not be refreshed until the server has been restarted or the "Reset" tag has been invoked. To invoke a reset, a non-zero value must be written to the Reset tag. Once the Reset tag has been invoked the driver will reinitialize all startup data from the device.

Alarm Setpoints
Data values for Alarm Setpoints that are undefined in the device will be returned as +INF. Data values can only be written to Alarm Setpoints that are defined in the device. Write operations to undefined Alarm Setpoints will return an error. Write operations are available only for users logged in at the Administrator level and will return an error otherwise. Alarm setpoint values are read one channel at a time. For devices with a large number of channels, increasing the scan rate of ASP items and/or reducing the number of active ASP items will increase the read performance of the PV and alarm data.

Scales
Data values for Scale_Hi and Scale_Lo for channels that are skipped will be returned as +INF.

Tag Names
For devices that do not support tag names and channels that have unspecified tag names, the driver will construct an internal tag name based on the channel number, for example, the tag name of address 'CH01' will be returned as 'CH01'.

General Device Data

Address Type	Format	Range	Data Type	Access
Administrator Level*	Admin		**Boolean**	Read Only

Date of Last Data	Date		**String**	Read Only
Time of Last Data	Time		**String**	Read Only
Model Name of Device*	Model		**String**	Read Only
Math Communication Data*	CDxx	01-30	**Float**	Read/Write
Control Math Execution	MathControl		**Short**, Word, Byte	Write Only
Reset Alarms	AlarmReset		**Boolean**	Write Only
Control Command and Response	Command		**String**	Read/Write
Previous Screen	PreScreen		**Boolean**	Write Only
Direct Reloading of Configuration	Reset		**Boolean**	Write Only

Administrator Level
The Admin address type has a value of '1' or 'true' when the user has logged on at the Administrator level and a value of '0' or 'false' when the user has logged on at the User level.

Math Communication Data
The CD address type is only valid for devices equipped with the math option and write operations to CD addresses for non-math equipped devices will return an error. Write operations are available only for users logged in at the Administrator level and will return an error otherwise. Note that CD addresses are initialized (read) at startup and will not be reread unless the server is restarted or the Reset tag is invoked. For more information, refer to **Note on Initialized Data**.

Model Name of Device
The Model address type will have a string value of 'DX100' or 'DX200', indicating the model series returned by the device.

Control Math Execution
The MathControl address type is only available for devices equipped with the math option and write operations to the MathControl tag for non-math equipped devices will return an error.

Control Command and Response
The Command address allows the user to send a string command and receive a string response to and from the device. This allows the user to send any command to the device, including commands not directly supported by the driver. This tag is only available to users logged in at the Administrator level and write operations will return an error otherwise. Warning: Write operations using the Command address should be performed with extreme caution!

Note 1: The actual number of addresses available for of each type is dependent on the configuration of the Yokogawa device. If at runtime the driver finds that an address is not present in the device, the driver will post an error message and remove the tag from its scan list.

Note 2: Addresses that have Write Only access are assigned a default access of Read/Write. However, data values are unreadable for these addresses and the associated tags are not included in the scan list. The current data value for these tags will always be 0 for numeric data types and null string for string data types.

Automatic Tag Database Generation

The automatic OPC tag database generation features of this driver have been designed to make the setting up the OPC application a Plug and Play operation. This driver can be configured to automatically build a list of OPC tags within the OPC Server that correspond to device specific data. The automatically generated OPC tags can then be browsed from the OPC client. The OPC tags that are generated depends on the nature of the driver.

If the target device supports its own local tag database the driver will read the device's tag information and use this data to generate OPC tags within the OPC Server. If the device does not natively support its own named tags, the driver will create a list of tags based on information specific to the driver. An example of these two conditions may be as follows:

1. A data acquisition system that supports its own local tag database. The driver will use the tags names found in the device to build the OPC Server's OPC tags.

2. An Ethernet I/O system that supports detection of I/O module type. The driver in this case will automatically generate OPC tags in the OPC Server that are based on the types of I/O modules plugged into the Ethernet I/O rack.

The mode of operation for automatic tag database generation is completely configurable. The following dialog is used to configure how the OPC Server and the associated communications driver will handle automatic OPC tag database generation.

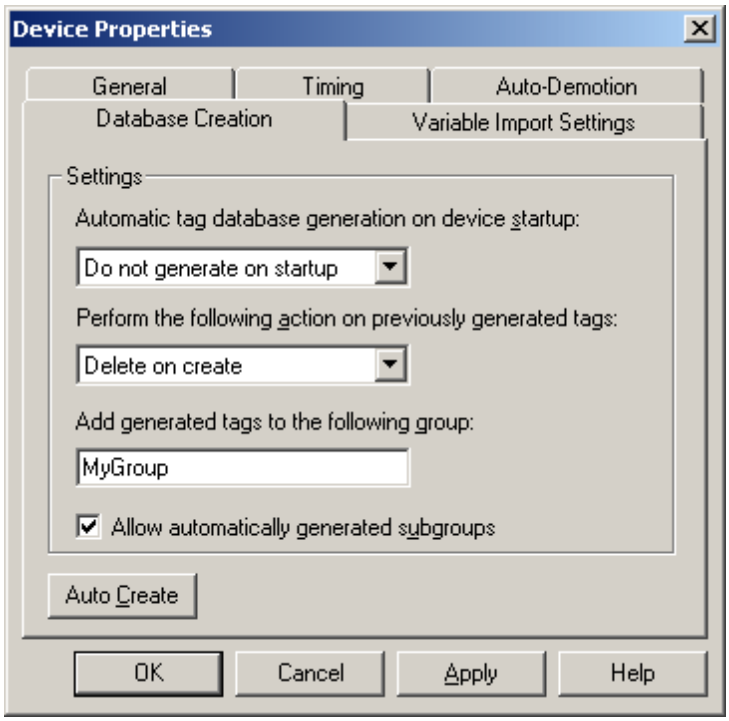

Automatic tag database generation on device startup is used to configure when OPC tags will be automatically generated. There are three possible selections:

- **Do not generate on startup**, the default condition, prevents the driver from adding any OPC tags to tag space of the OPC Server.
- **Always generate on startup** causes the driver to always evaluate the device for tag information and to add OPC tags to the tag space of the server each time the server is launched.
- **Generate on first startup** causes the driver to evaluate the target device for tag information the first time this OPC Server project is run and to add any OPC tags to the server tag space as needed.

When the automatic generation of OPC tags is selected, any tags that are added to the server's tag space must be saved with the project. The OPC Server project can be configured to auto save from the **Tools**|**Options** menu.

When automatic tag generation is enabled, the server needs to know what to do with OPC tags that it may have added from a previous run or with OPC tags that have been added or modified after the communications driver added them. **Perform the following action** is used to control how the server will handle OPC tags that were automatically generated and currently exist in the OPC Server project. This feature prevents automatically

generated tags from piling up in the server. This would occur if, using the Ethernet I/O example above, you continued to change the I/O modules in the rack with the OPC Server configured to always generate new OPC tags on startup. Under this condition every time the communications driver detected a new I/O module, the tags would be added to the server. If the old tags are not removed, a number of unused tags could accumulate in the server's tag space. **Perform the following action** is used to tailor the server's operation to best fit the application's needs. Descriptions of the selections are as follows:

1. **Delete on create**, the default condition, allows the server to remove any tags that had previous been added to the tag space before the communications driver can add any new tags.
2. **Overwrite as necessary** allows the server to remove only tags the communications driver is replacing with new tags. Any tags that are not being overwritten will remain in the server's tag space.
3. **Do not overwrite** prevents the server from removing any tags that had been previous generated or may have already existed in the server. With this selection, the communications driver can only add tags that are completely new.
4. **Do not overwrite, log error** has the same effect as the third with the addition: an error message will be posted to the OPC Server's event log when a tag overwrite would have occurred.

Note: Removing OPC tags affects tags that have been automatically generated by the communications driver and any tags that have been added using names that match generated tags. We recommend that users avoid adding tags to the server using names that match tags that may be automatically generated by the driver.

The parameter **Add generated tags to the following group** can be used to keep automatically generated tags from mixing with tags that have been entered manually. This parameter specifies a sub group that will be used when adding all automatically generated tags for this device. The name of the sub group can be up to 31 characters in length. The following displays demonstrate how this parameter affects where automatically generated tags are placed in the server's tag space. As shown below, this parameter provides a root branch to which all automatically generated tags will be added.

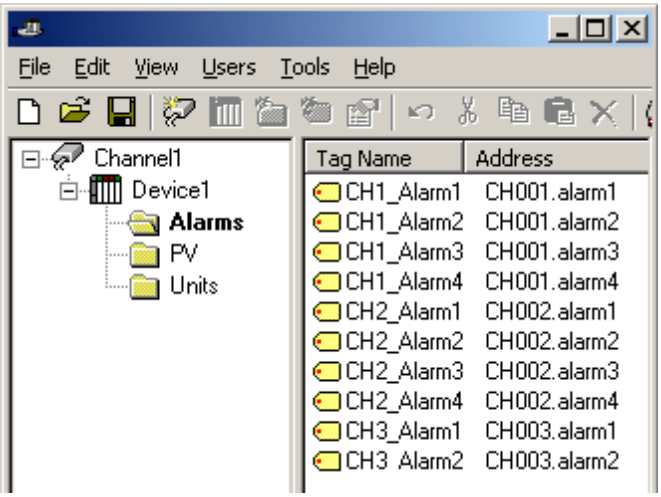

No sub group specified.

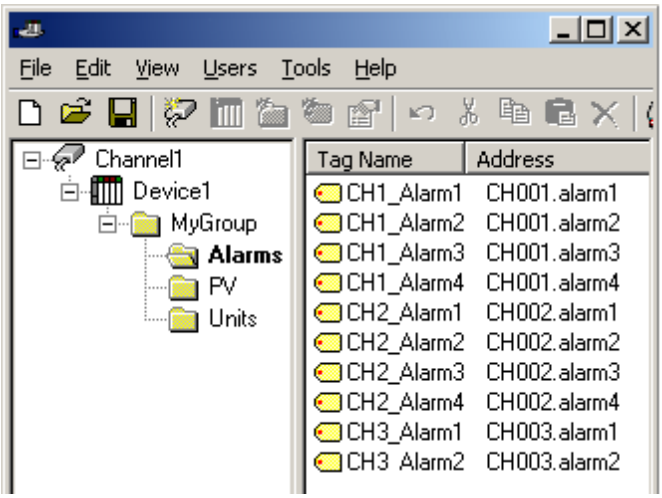

Sub group named MyGroup specified.

The **Auto Create** button can be used to manually initiate the creation of automatically generated OPC tags. It forces the communications driver to reevaluate the device for possible tag changes after the device's configuration has been modified. Auto Create can also be accessed from System Tags, in order to have the device allow the OPC client application to initiate tag database creation.

Error Descriptions

The following error/warning messages may be generated. Click on the link for a description of the message.

Address Validation

Missing address
Device address '<address>' contains a syntax error
Address '<address>' is out of range for the specified device or register
Data Type '<type>' is not valid for device address '<address>'
Device address '<address>' is Read Only

Serial Communications

COMn does not exist
Error opening COMn
COMn is in use by another application
Unable to set comm parameters on COMn
Communications error on '<channel name>' [<error mask>]

Device Status Messages

Device '<device name>' is not responding
Unable to write to '<address>' on device '<device name>

Address Validation

The following error/warning messages may be generated. Click on the link for a description of the message.

Address Validation

Missing address
Device address '<address>' contains a syntax error
Address '<address>' is out of range for the specified device or register
Data Type '<type>' is not valid for device address '<address>'
Device address '<address>' is Read Only

Missing address

Error Type:
Warning

Possible Cause:
A tag address that has been specified dynamically has no length.

Solution:
Re-enter the address in the client application.

Device address '<address>' contains a syntax error

Error Type:
Warning

Possible Cause:
A tag address that has been specified dynamically contains one or more invalid characters.

Solution:
Re-enter the address in the client application.

Address '<address>' is out of range for the specified device or register

Error Type:
Warning

Possible Cause:
A tag address that has been specified dynamically references a location that is beyond the range of supported locations for the device.

Solution:
Verify the address is correct; if it is not, re-enter it in the client application.

Data Type '<type>' is not valid for device address '<address>'

Error Type:
Warning

Possible Cause:
A tag address that has been specified dynamically has been assigned an invalid data type.

Solution:
Modify the requested data type in the client application.

Device address '<address>' is Read Only

Error Type:
Warning

Possible Cause:
A tag address that has been specified dynamically has a requested access mode that is not compatible with what the device supports for that address.

Solution:
Change the access mode in the client application.

Serial Communications

The following error/warning messages may be generated. Click on the link for a description of the message.

Serial Communications
COMn does not exist
Error opening COMn
COMn is in use by another application
Unable to set comm parameters on COMn
Communications error on '<channel name>' [<error mask>]

COMn does not exist

Error Type:
Fatal

Possible Cause:
The specified COM port is not present on the target computer.

Solution:
Verify that the proper COM port has been selected.

Error opening COMn

Error Type:
Fatal

Possible Cause:
The specified COM port could not be opened due to an internal hardware or software problem on the target computer.

Solution:
Verify that the COM port is functional and may be accessed by other Windows applications.

COMn is in use by another application

Error Type:
Fatal

Possible Cause:
The serial port assigned to a device is being used by another application.

Solution:
1. Verify that the correct port has been assigned to the channel.
2. Verify that only one copy of the current project is running.

Unable to set comm parameters on COMn

Error Type:
Fatal

Possible Cause:
The serial parameters for the specified COM port are not valid.

Solution:
Verify the serial parameters and make any necessary changes.

Communications error on '<channel name>' [<error mask>]

Error Type:
Serious

Error Mask Definitions:
B = Hardware break detected.
F = Framing error.
E = I/O error.
O = Character buffer overrun.
R = RX buffer overrun.
P = Received byte parity error.
T = TX buffer full.

Possible Cause:
1. The serial connection between the device and the host PC is bad.
2. The communications parameters for the serial connection are incorrect.

Solution:
1. Verify the cabling between the PC and the PLC device.
2. Verify that the specified communications parameters match those of the device.

Device Status Messages

The following error/warning messages may be generated. Click on the link for a description of the message.

Device Status Messages
Device '<device name>' is not responding
Unable to write to '<address>' on device '<device name>

Device '<device name>' is not responding

Error Type:
Serious

Possible Cause:
1. The connection between the device and the host PC is broken.
2. The IP address assigned to the device is incorrect.
3. The connection cannot be established in the specified timeout period.
4. The response cannot be received in the specified timeout period.

Solution:
1. Verify the cabling between the PC and the PLC device.
2. Verify the IP address given to the named device matches that of the actual device.
3. Increase the Connect Timeout value in the Timeout page of Device Properties.
4. Increase the Request Timeout value in the Timeout page of Device Properties.

Unable to write to '<address>' on device '<device name>'

Error Type:

Serious

Possible Cause:

1. The connection between the device and the host PC is broken.
2. The named device may have been assigned an incorrect IP address.
3. The address specified may be Read Only or may not exist in the current device.

Solution:

1. Verify the cabling between the PC and the PLC device.
2. Verify the IP address given to the named device matches that of the actual device.
3. Check address availability for the device.

Index

A

Address '<address>' is out of range for the specified device or register 32
Address Descriptions 8
Address Validation 32
Automatic Tag Database Generation 29

B

BCD 7
Boolean 7

C

Communications error on '<channel name>' [<error mask>] 34
COMn does not exist 33
COMn is in use by another application 33

D

Data Type '<type>' is not valid for device address '<address>' 33
Data Types Description 7
Device '<device name>' is not responding 34
Device address '<address>' contains a syntax error 32
Device address '<address>' is Read Only 33
Device ID 4
Device Setup 4
Device Status Messages 34
DWord 7
DX102 Addressing 8
DX104 Addressing 10
DX106 Addressing 12
DX112 Addressing 13
DX204 Addressing 15
DX208 Addressing 17
DX210 Addressing 19
DX220 Addressing 21
DX230 Addressing 23

E

Error Descriptions 32
Error opening COMn 33

F

Float 7

L

LBCD 7
Long 7

M

Missing address 32
Modem Setup 6
MV100 Addressing 24
MV200 Addressing 26

N

Network 4

O

Overview 3

S

Serial Communications 33
Short 7

U

Unable to set comm parameters on COMn 34
Unable to write tag '<address>' on device '<device name>' 35

W

Word 7